Double Ear Clips

Series 74

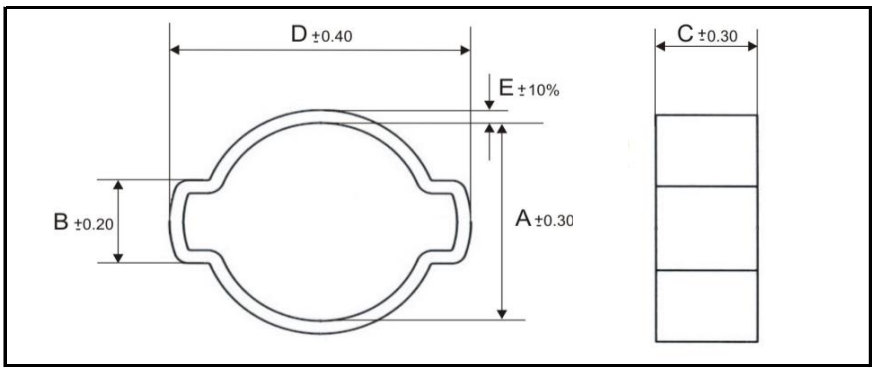



Notes:
- All clips marked with size
- Assortments available page 5
- Pincers available page 5

Mild steel zinc plated								
Part	Size range		A	B	C	D	E	Box
	Metric	Inch	(mm)	(mm)	(mm)	(mm)	(mm)	qty
A740050-007	5-7	1/4"	7.3	4.3	6.0	11.0	0.6	200
A740070-009	7-9	5/16"	9.3	4.8	6.0	13.5	0.8	200
A740090-011	9-11	3/8"	11.3	5.3	6.5	17.0	0.8	200
A740100-012	10-12	7/16"	12.3	5.5	6.5	18.0	0.9	200
A740110-013	11-13	1/2"	13.3	5.8	6.5	19.0	0.9	200
A740130-015	13-15	9/16"	15.3	6.3	7.0	21.5	1.0	100
A740140-017	14-17	19/32"	17.5	6.6	7.0	24.0	1.2	100
A740150-018	15-18	5/8"	18.5	7.0	7.5	25.0	1.2	100
A740170-020	17-20	3/4"	20.5	7.6	7.5	27.0	1.2	100
A740180-021	18-21	13/16"	21.5	7.9	8.0	28.0	1.2	100
A740200-023	20-23	7/8"	23.5	8.5	8.0	31.0	1.3	100
A740220-025	22-25	15/16"	25.5	9.1	8.5	33.0	1.4	100
A740230-027	23-27	1"	27.5	9.4	8.5	35.0	1.4	50
A740250-028	25-28	1.1/16"	28.5	10.0	9.0	36.0	1.4	50
A740280-031	28-31	1.3/16"	31.5	10.6	9.0	39.0	1.4	50
A740310-034	31-34	1.1/4"	34.5	11.0	9.5	42.0	1.4	50
A740340-037	34-37	1.3/8"	37.5	11.5	9.5	46.0	1.6	50
A740370-040	37-40	1.1/2"	40.5	12.0	10.0	49.0	1.6	25
A740400-043	40-43	1.5/8"	43.5	12.5	10.0	53.0	1.6	25
A740430-046	43-46	1.3/4"	46.5	13.0	10.5	56.0	1.6	25

Series A74

Manufactured according to:
DIN 2393 C Rst 34-2-GBK

Stock finish:
W1 Mild steel
Chrome free zinc plated
Minimum thickness 8-10 microns

Stainless steel								
D740050-007	5-7	1/4"	7.3	4.3	6.0	11.5	0.6	50
D740070-009	7-9	5/16"	9.3	4.8	6.0	14.5	0.8	50
D740090-011	9-11	3/8"	11.3	5.3	6.5	16.5	0.8	50
D740110-013	11-13	1/2"	13.3	5.8	6.5	19.0	0.8	50
D740130-015	13-15	9/16"	15.3	6.3	7.0	21.5	1.0	50
D740140-017	14-17	19/32"	17.5	6.6	7.0	24.0	1.0	50
D740150-018	15-18	5/8"	18.5	7.0	7.5	25.0	1.0	50
D740170-020	17-20	3/4"	20.5	7.6	7.5	27.0	1.0	50
D740180-021	18-21	13/16"	21.5	7.9	8.0	28.5	1.0	50
D740200-023	20-23	7/8"	23.5	8.5	8.0	30.5	1.0	50
D740220-025	22-25	15/16"	25.5	9.1	8.5	33.5	1.2	50

Series D74

Manufactured according to:
DIN 2463

Stock finish:
W4 Stainless steel AISI 304